inspire

Ledflexi Strip Connector

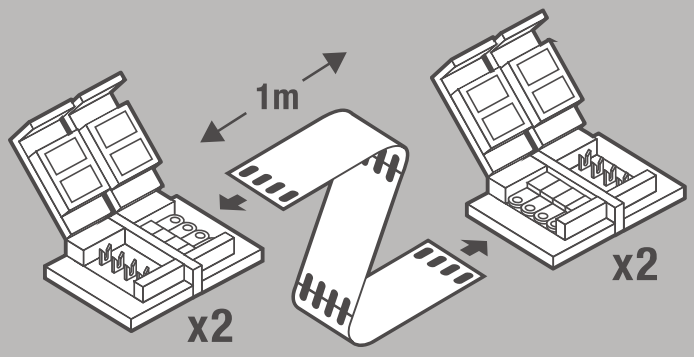

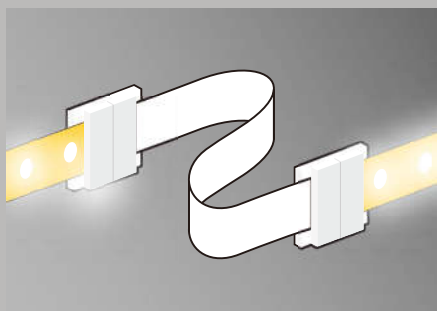

5 YEARS GUARANTEE *