TOOMAX®

ELEGANCE

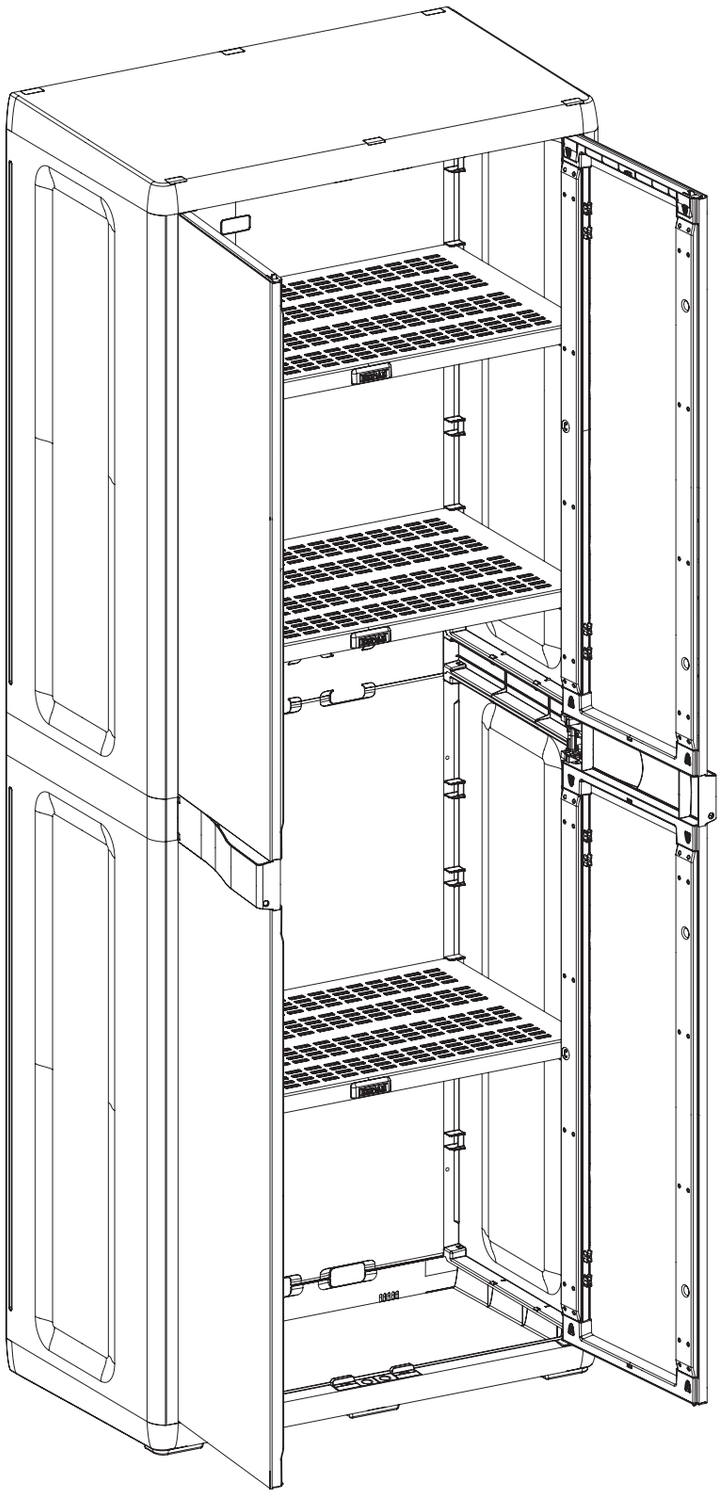

Art. 022 cm 65x38x171h | in 25,6x15x67,3h

A

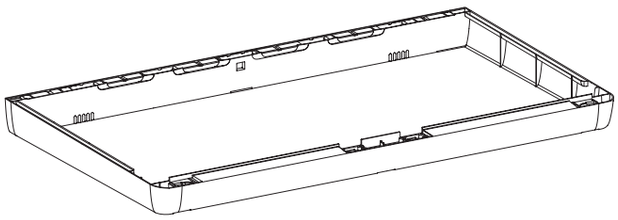

PZ / PCS 2

B

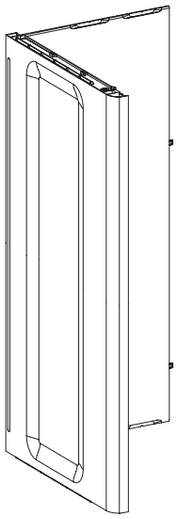

PZ / PCS 4

C

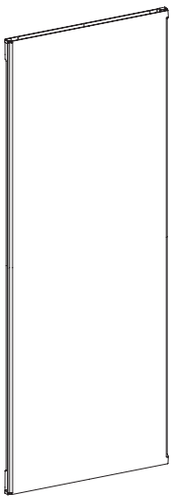

PZ / PCS 4

D

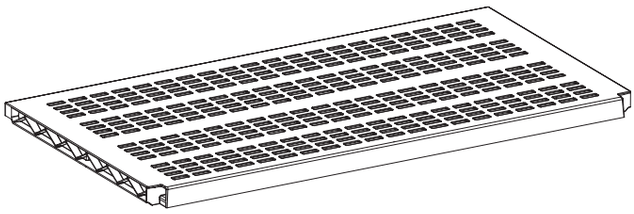

PZ / PCS 3

W1

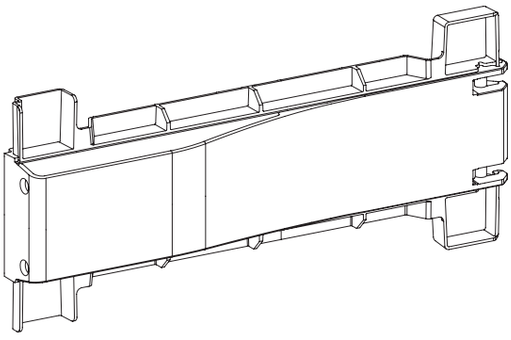

PZ / PCS 2

U

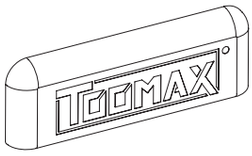

PZ / PCS 3

O

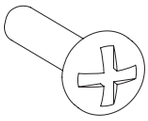

PZ / PCS 4

G1

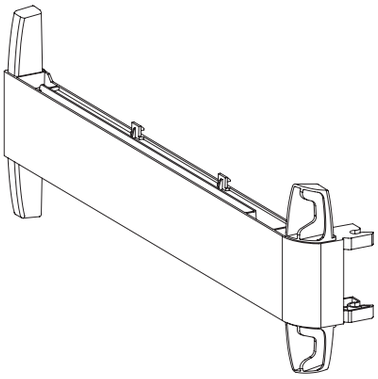

PZ / PCS 2

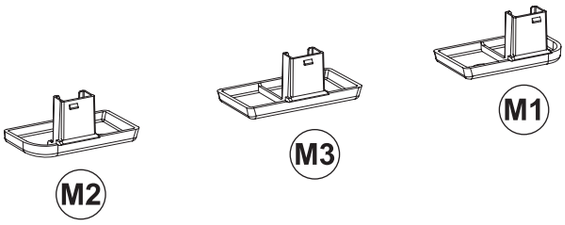

PZ / PCS 1

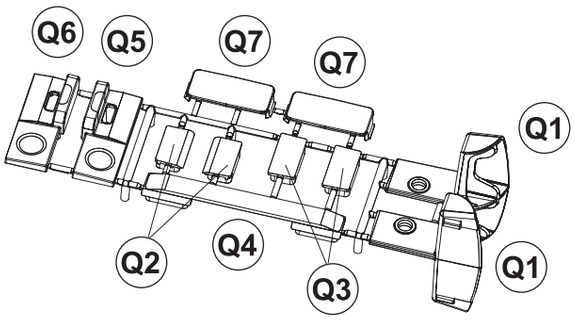

PZ / PCS 2

P1

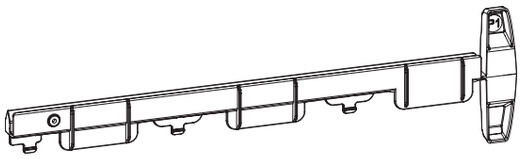

PZ / PCS 2

P2

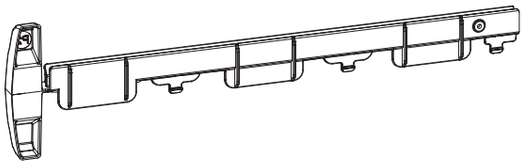

PZ / PCS 2

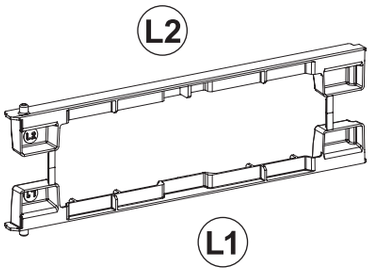

PZ / PCS 2

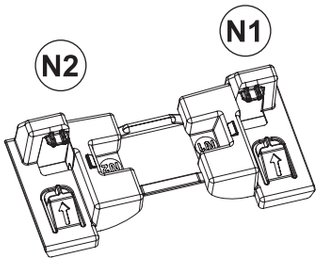

PZ / PCS 3

K1

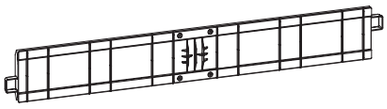

PZ / PCS 1

1

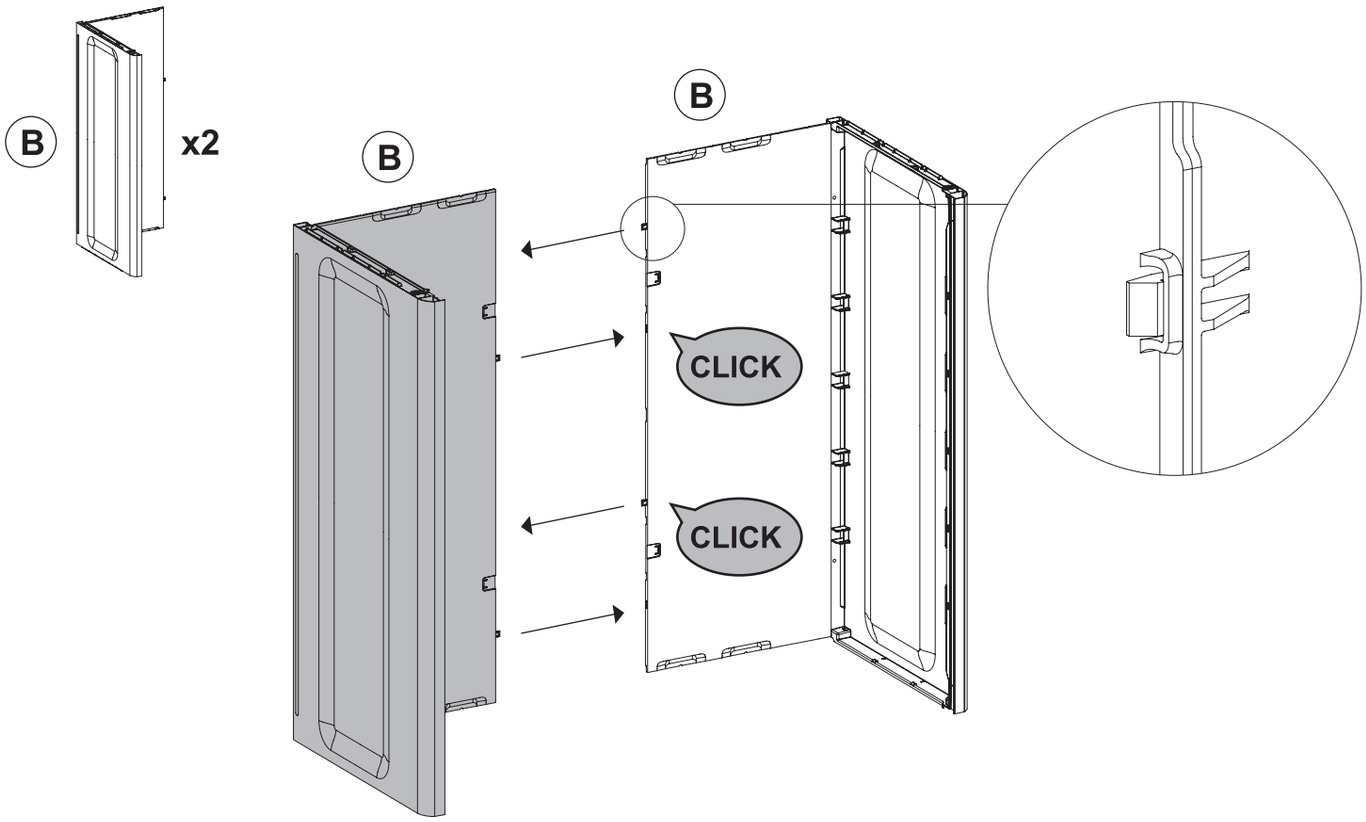

2

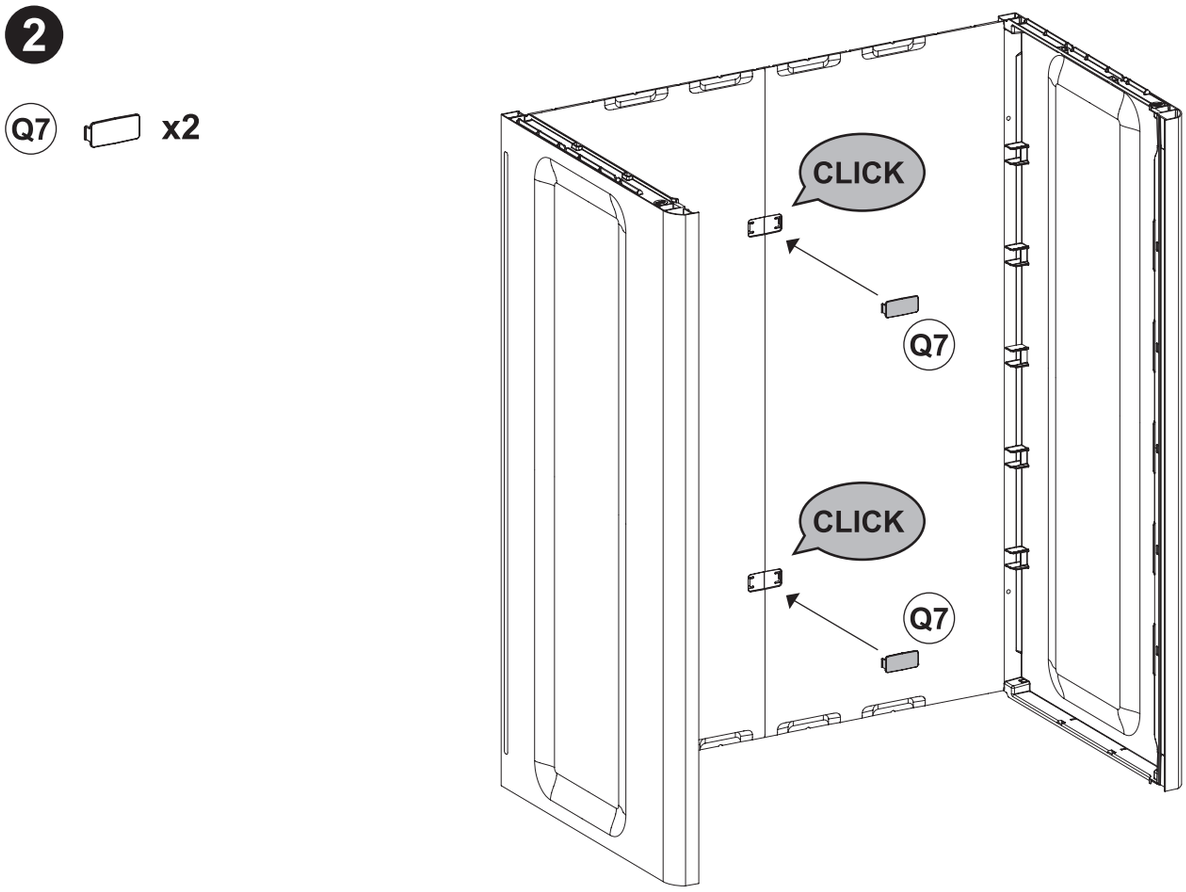

3

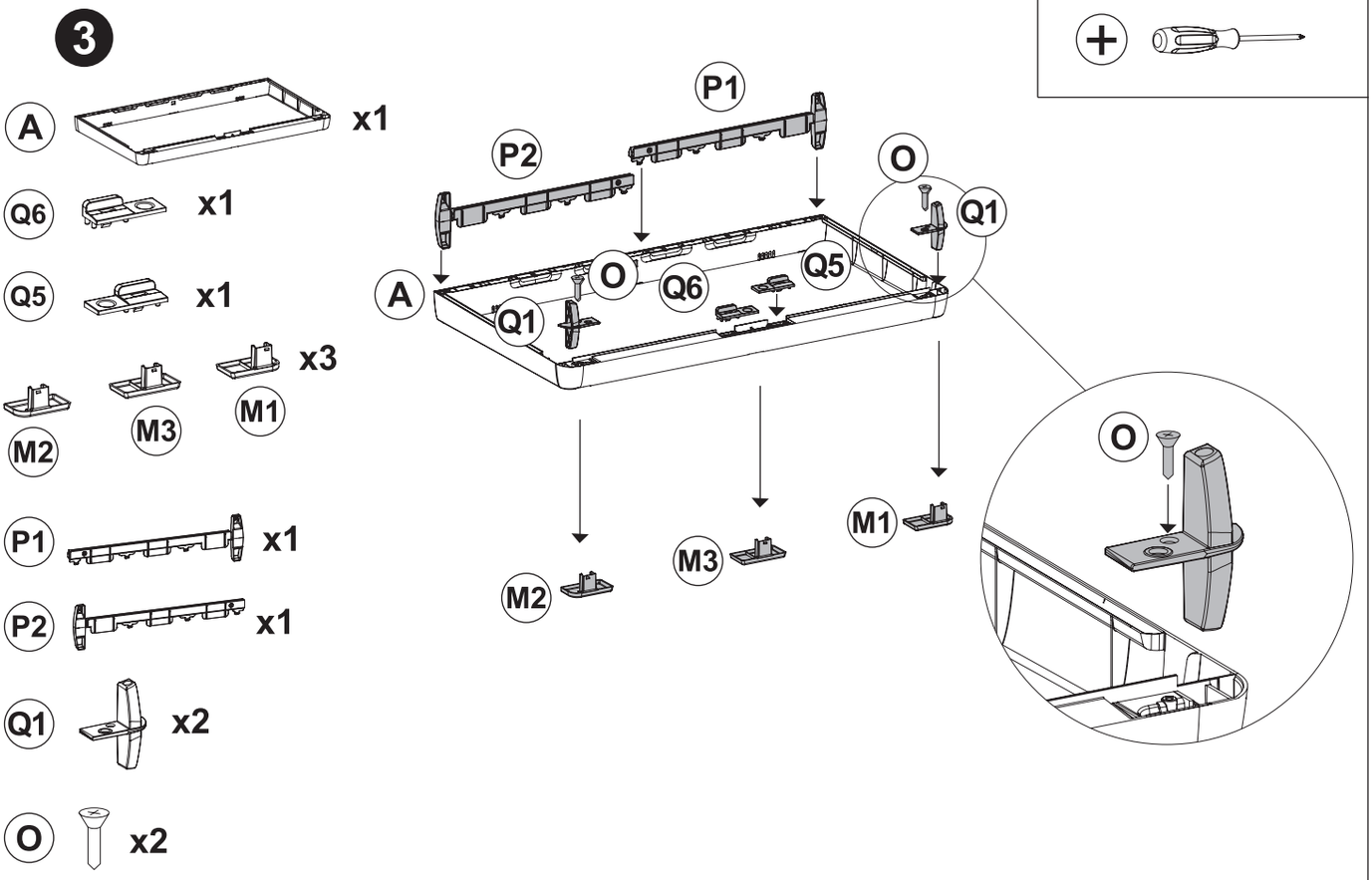
A x1
Q6 x1
Q5 x1
M2
M3
M1 x3
P1 x1
P2 x1
Q1 x2
O x2
P1
P2
O
Q1
A
O
Q6
Q5
Q1
M2
M3
M1
O

4

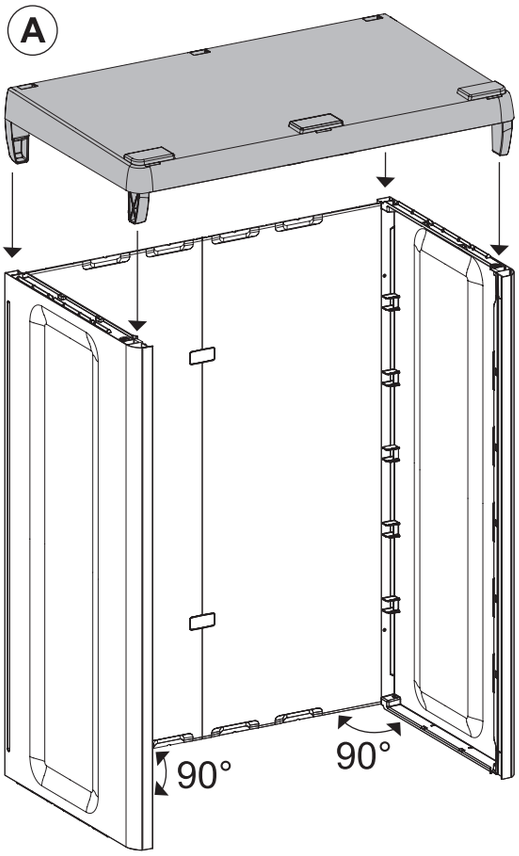
A
90°
90°

5

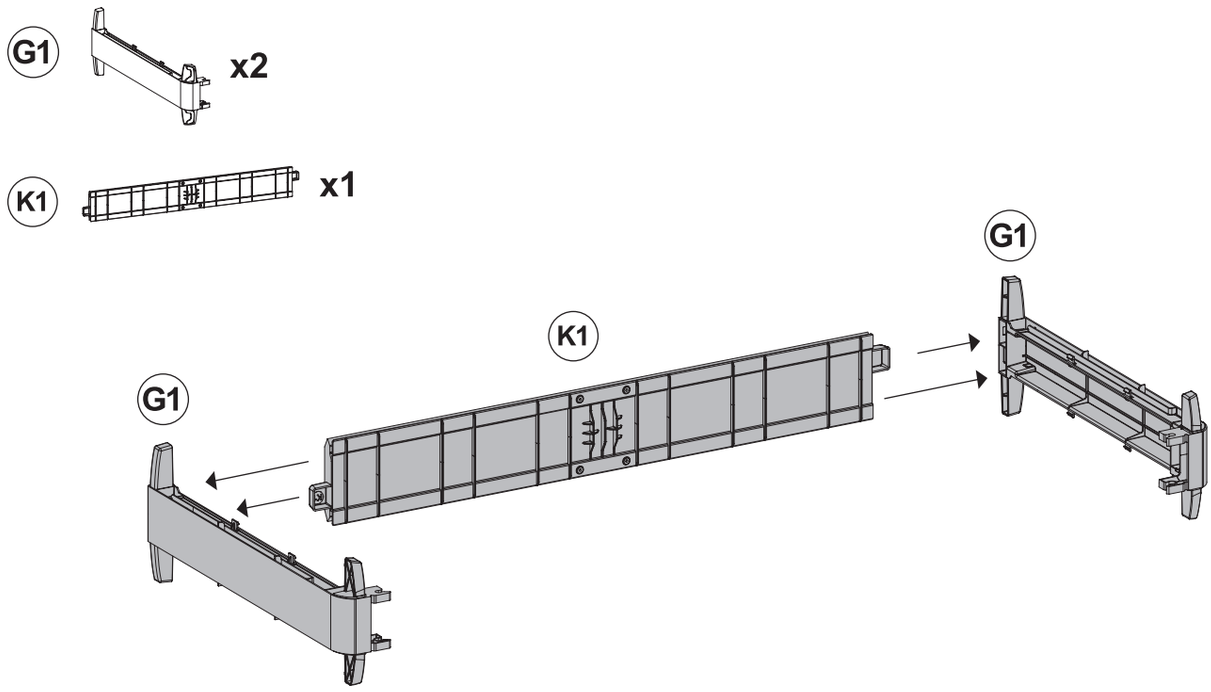

6

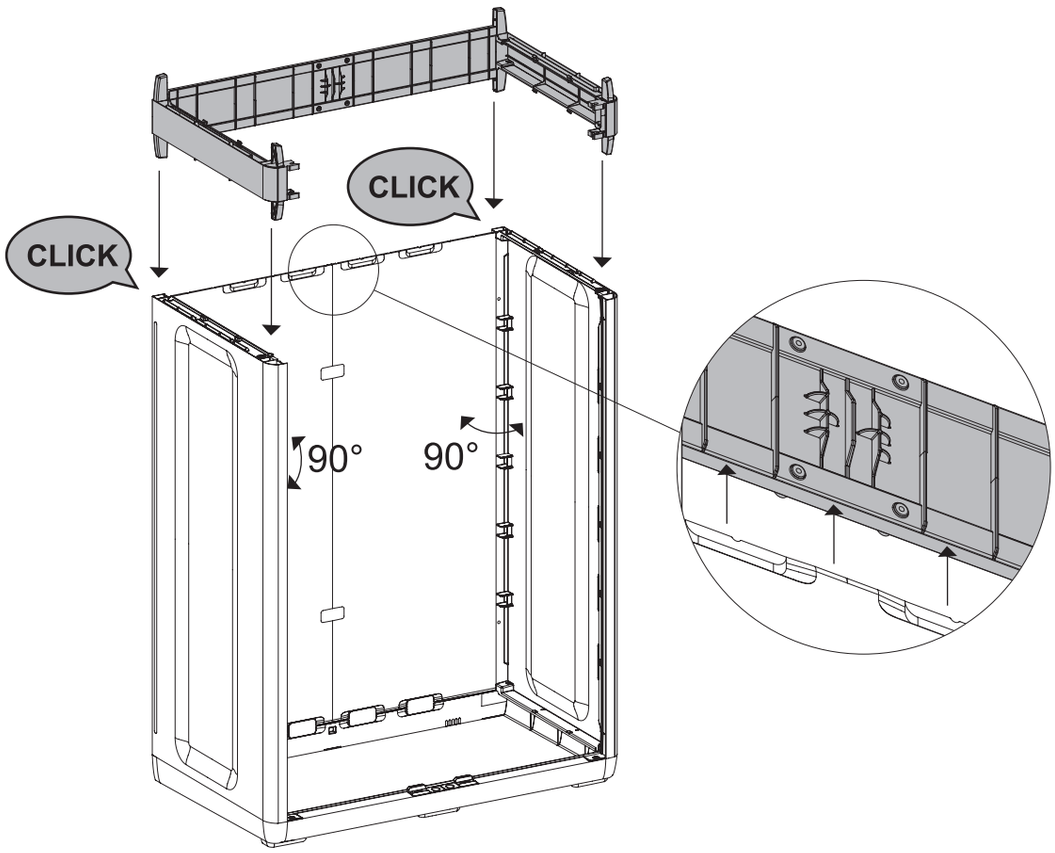

7

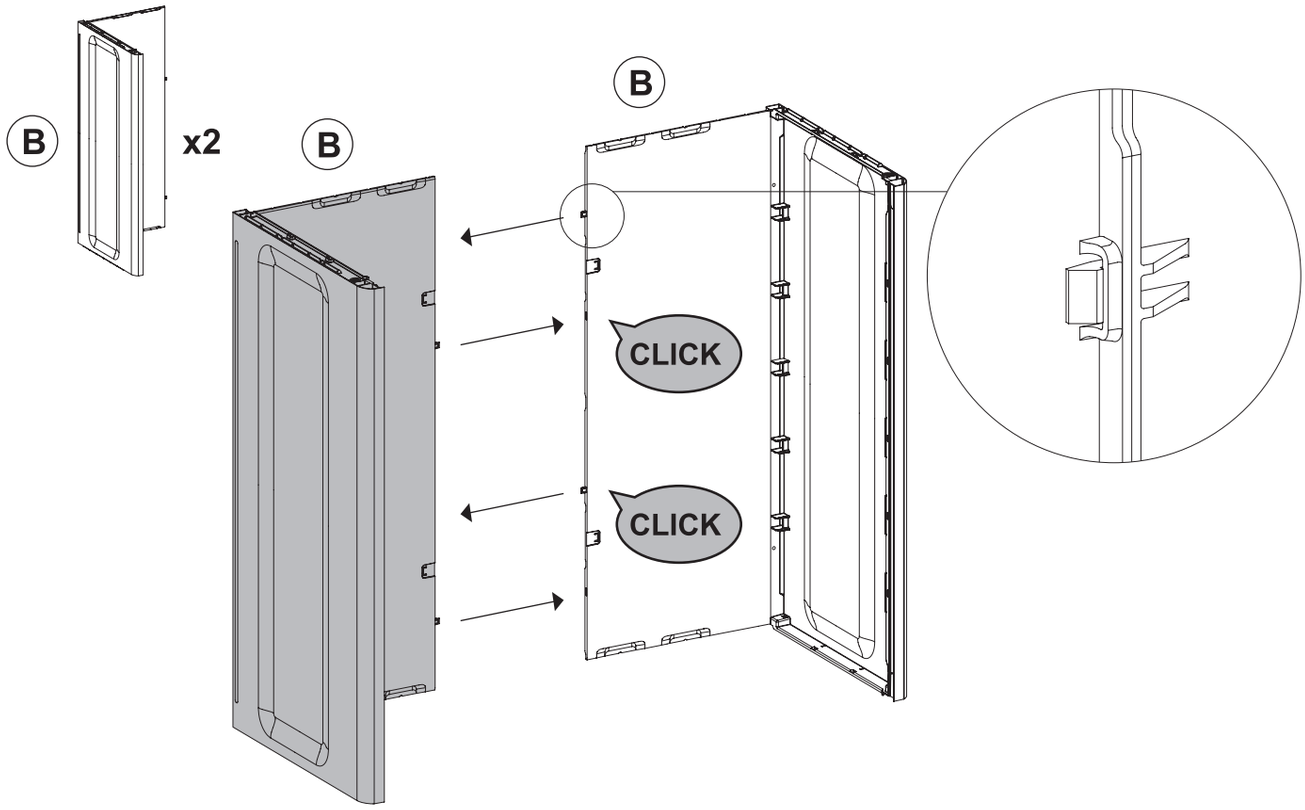

8

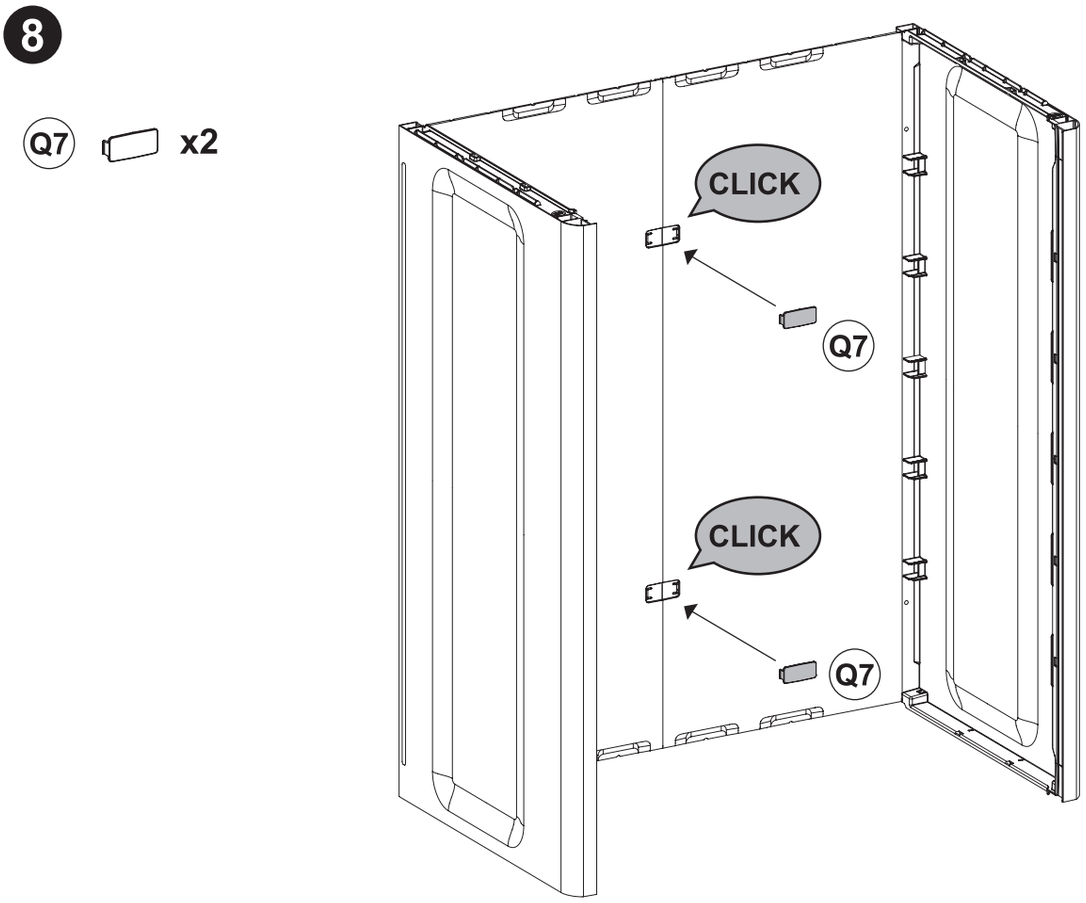

9

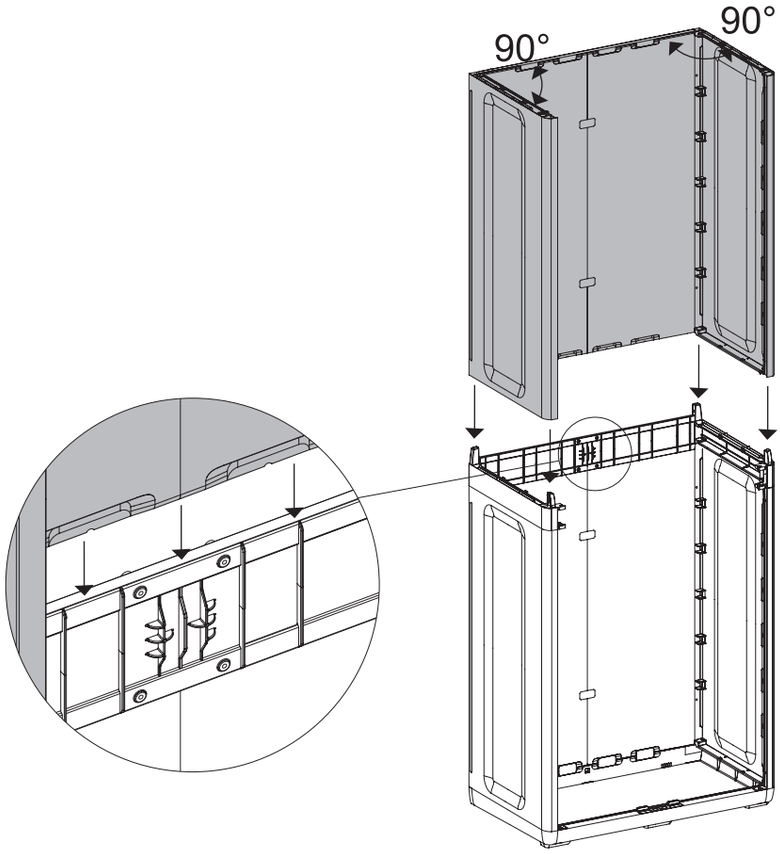

10

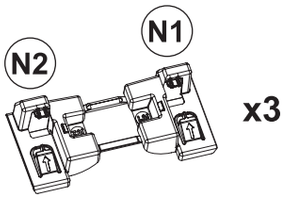

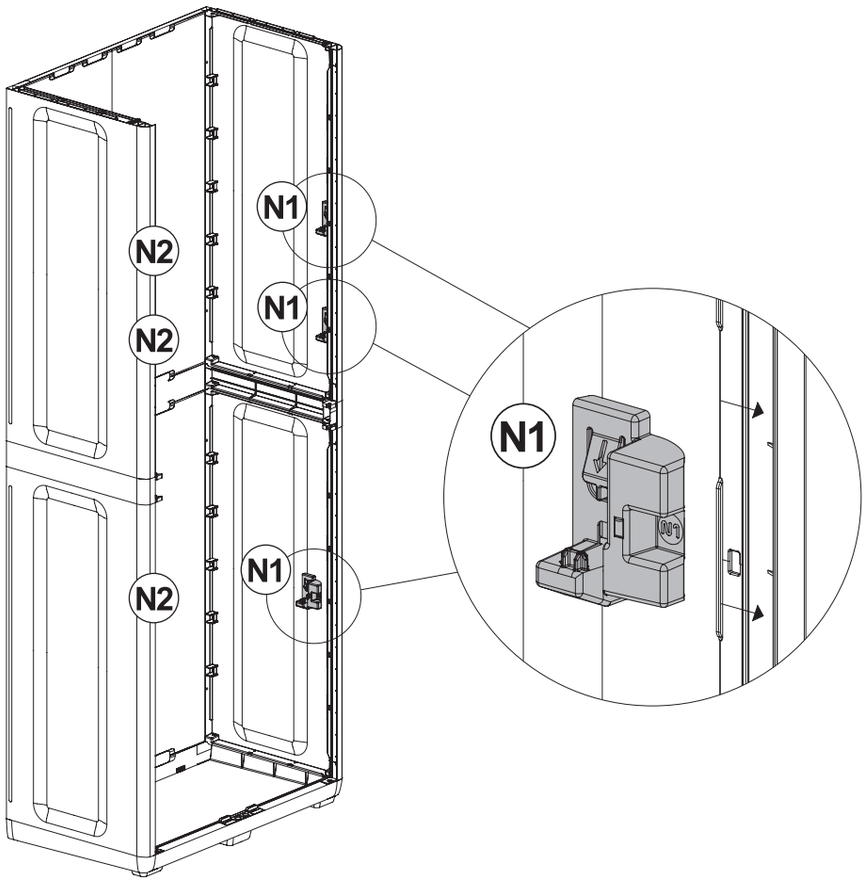

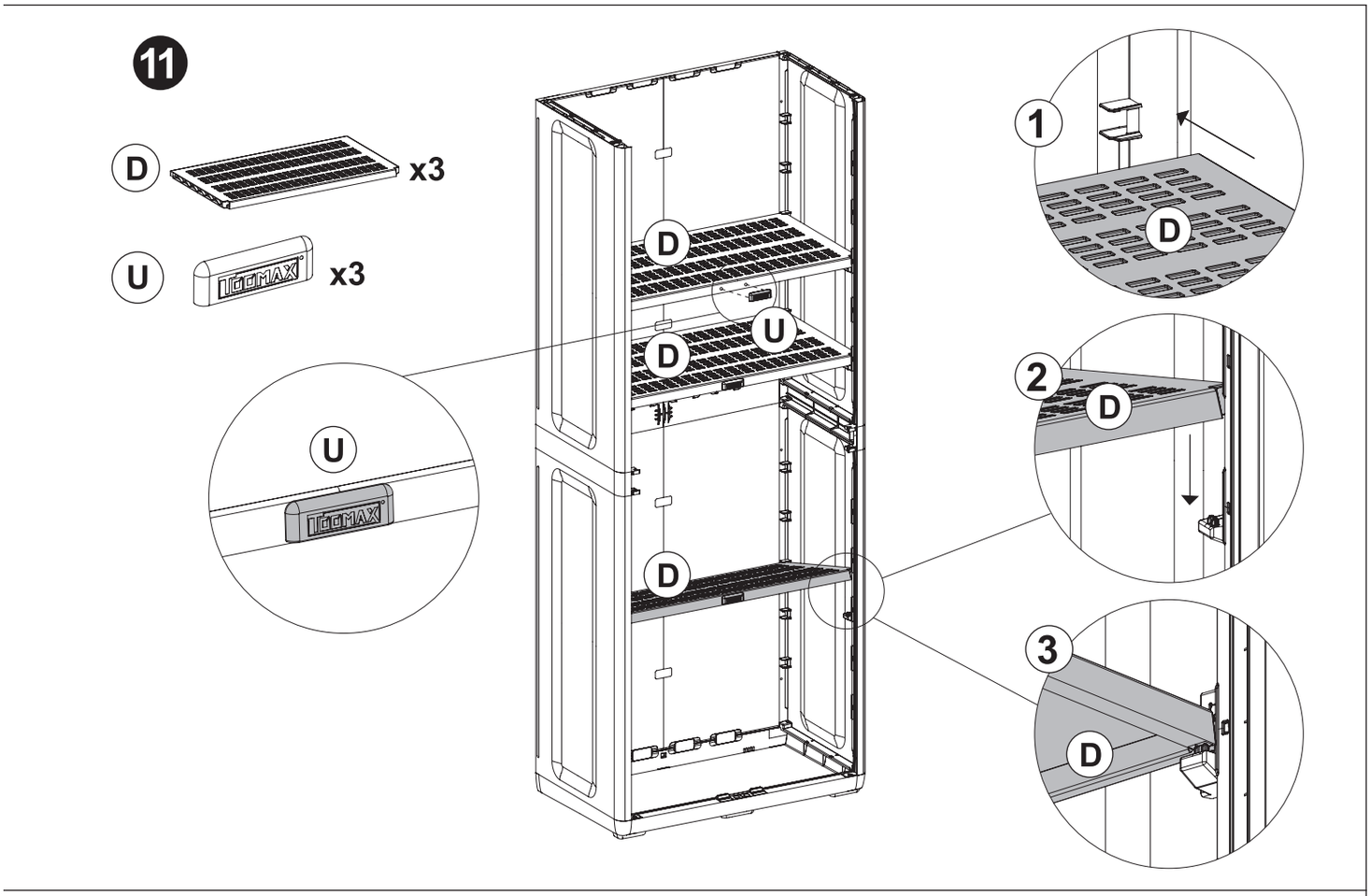
11
D
x3
U
x3
D
U
D
D
U
1
D
2
D
3
D

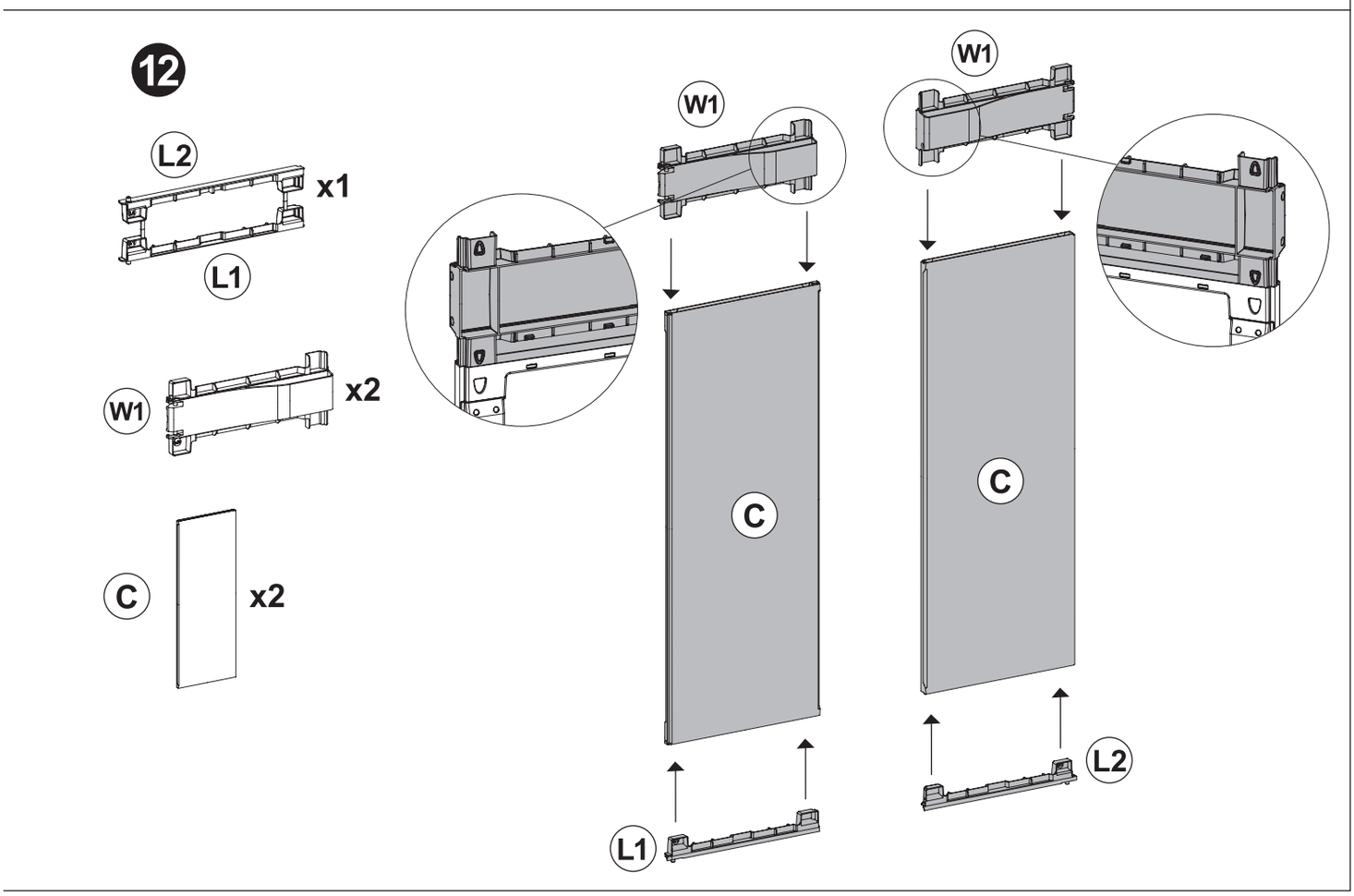
12
L2
x1
L1
W1
x2
C
x2
W1
W1
C
C
L1
L2

13

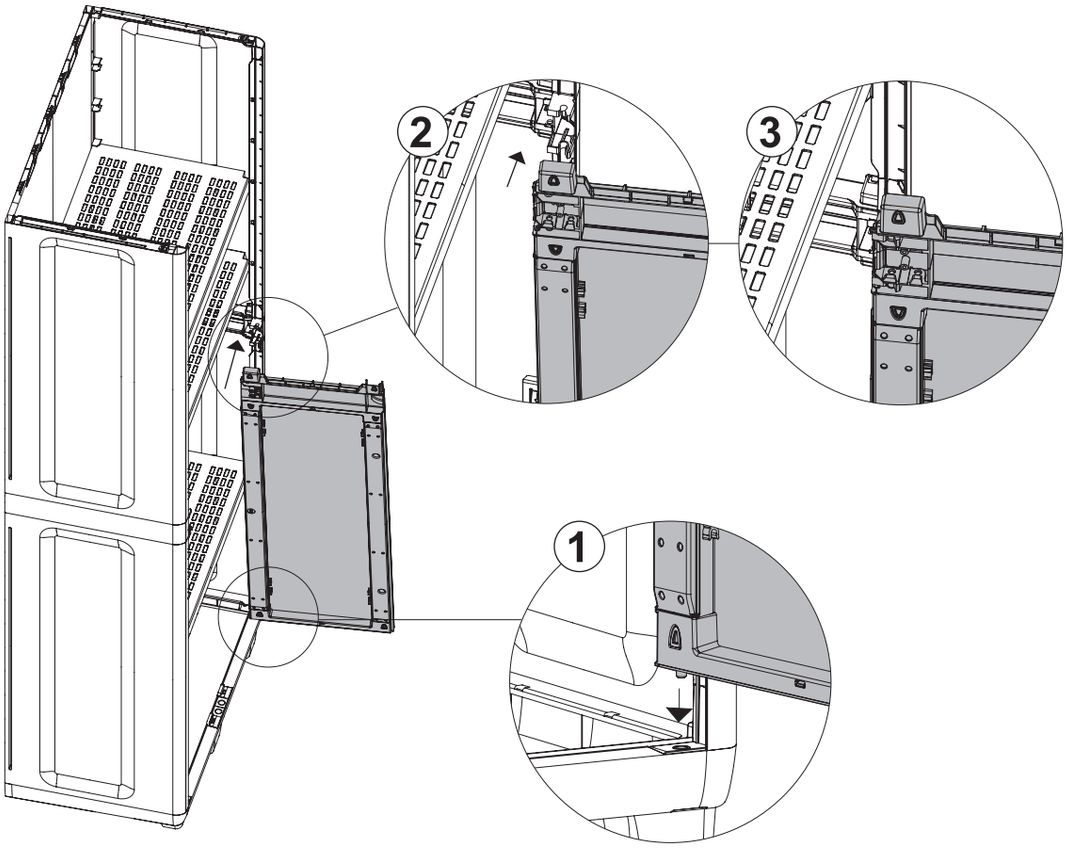

14

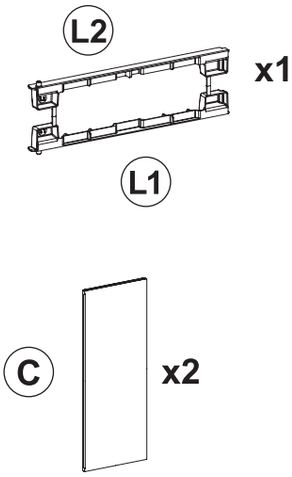

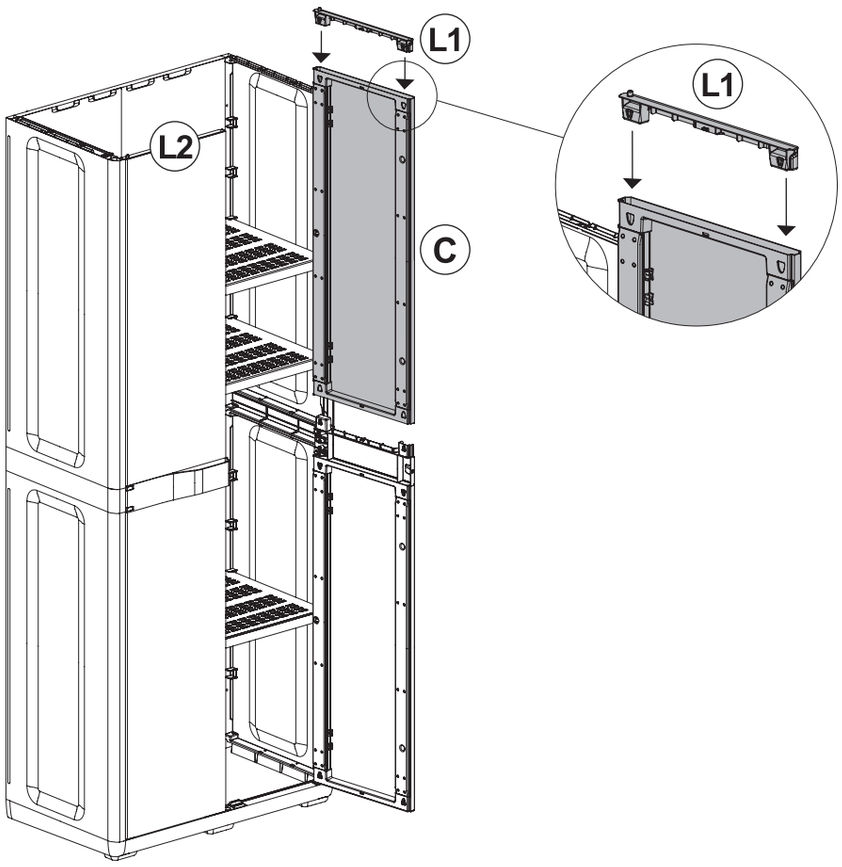

15

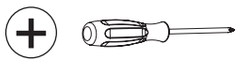

A x1

Q6 x1

Q5 x1

P1 x1

P2 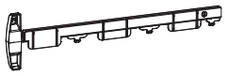 x1

O x2

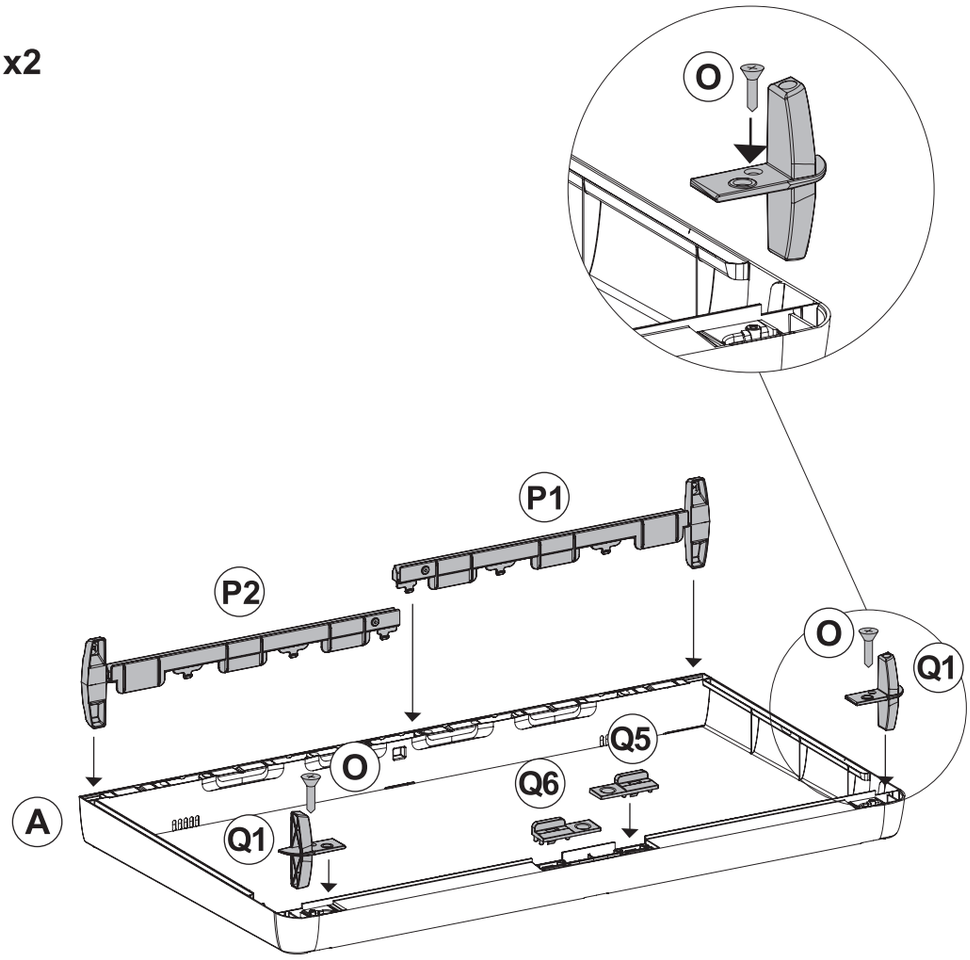

16

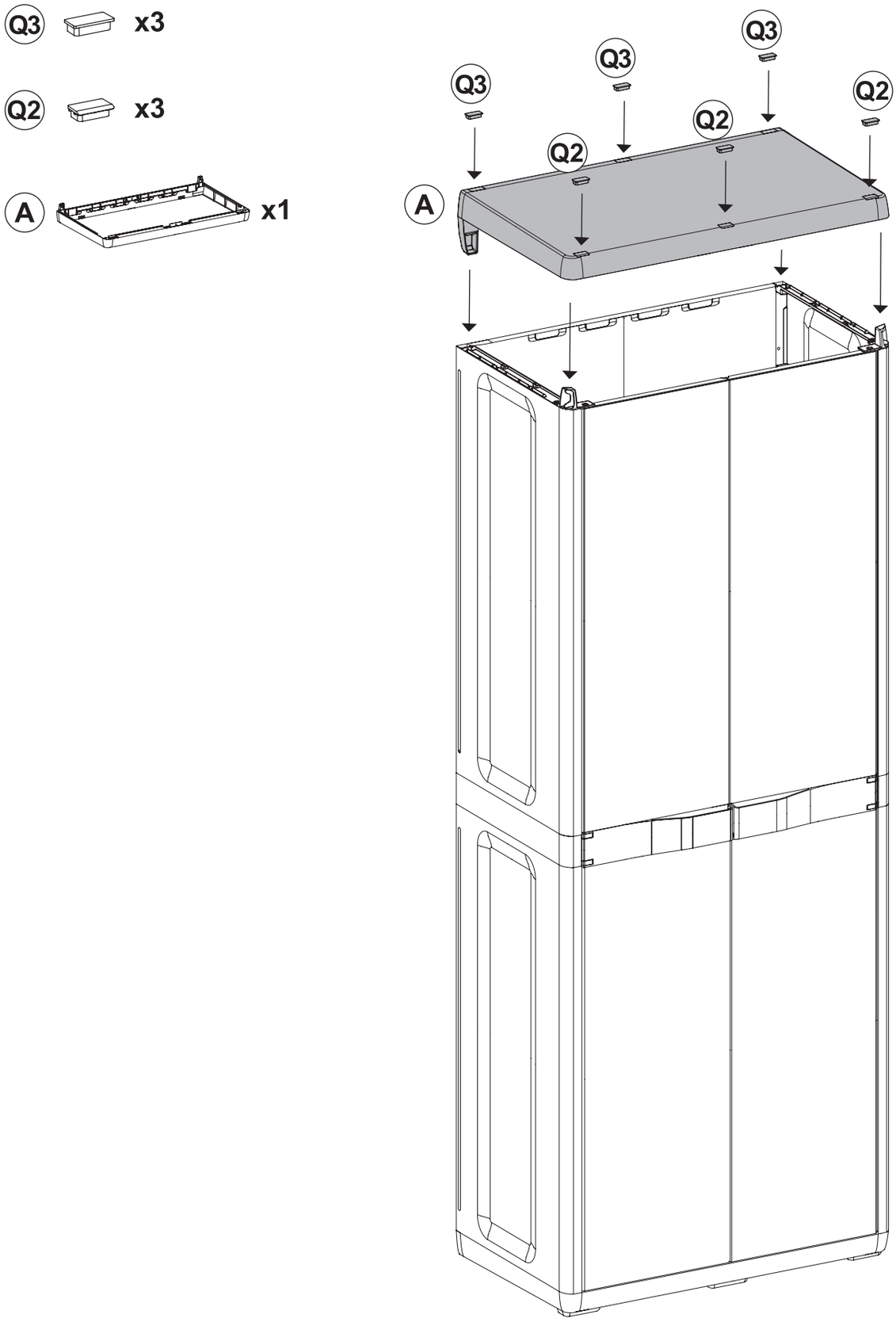

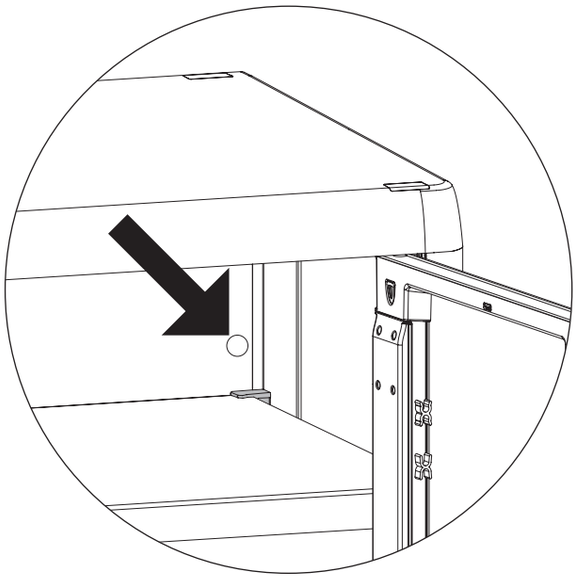

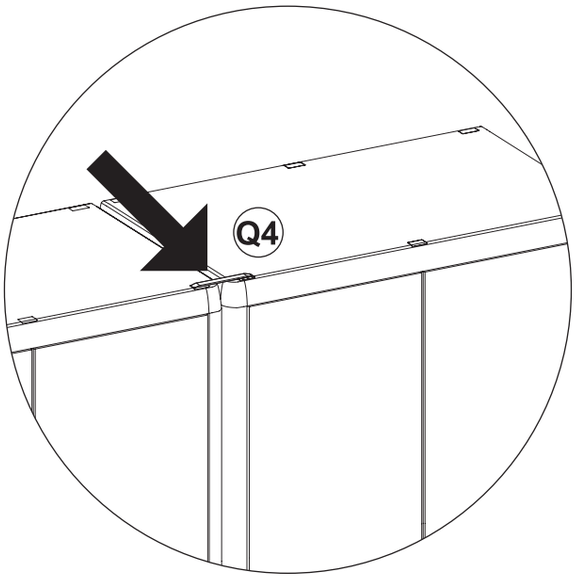
Q4

1
PUSH

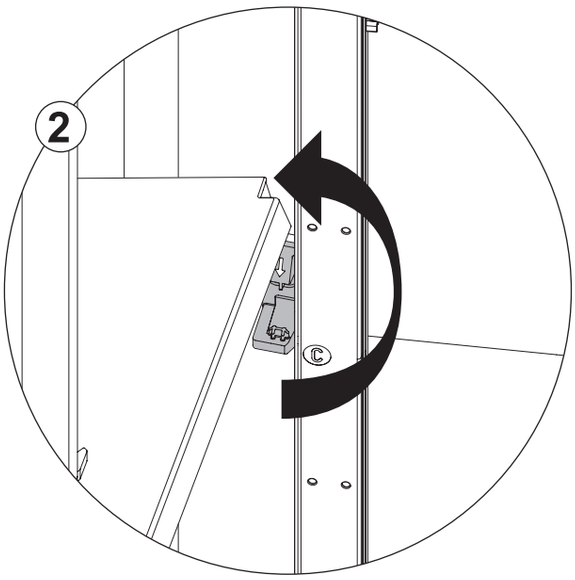
2

Plastmeccanica S.p.A.
Viale del Lavoro, 3
60030 Castelbellino (An) - ITALY
Tel. +39 0731 70766 - Fax +39 0731 703796
info@plastmeccanica.it

www.toomax.it

4602246